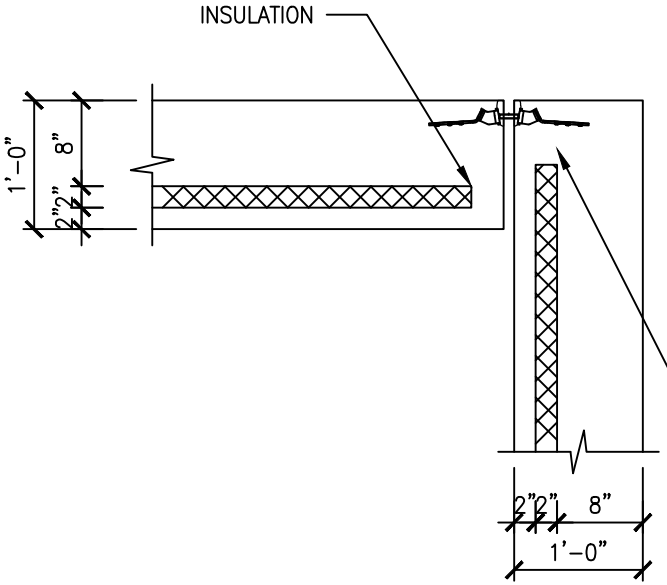
INSULATION
1'-0"
8"
2"2"
2"2"
8"
1'-0"

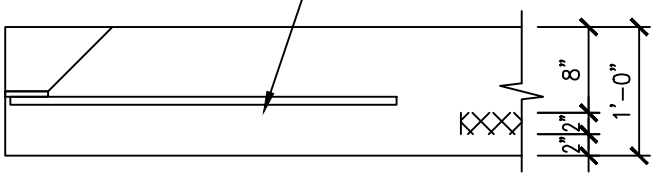
INSULATION BLOCK OUT
8"
1'-0"
2"2"

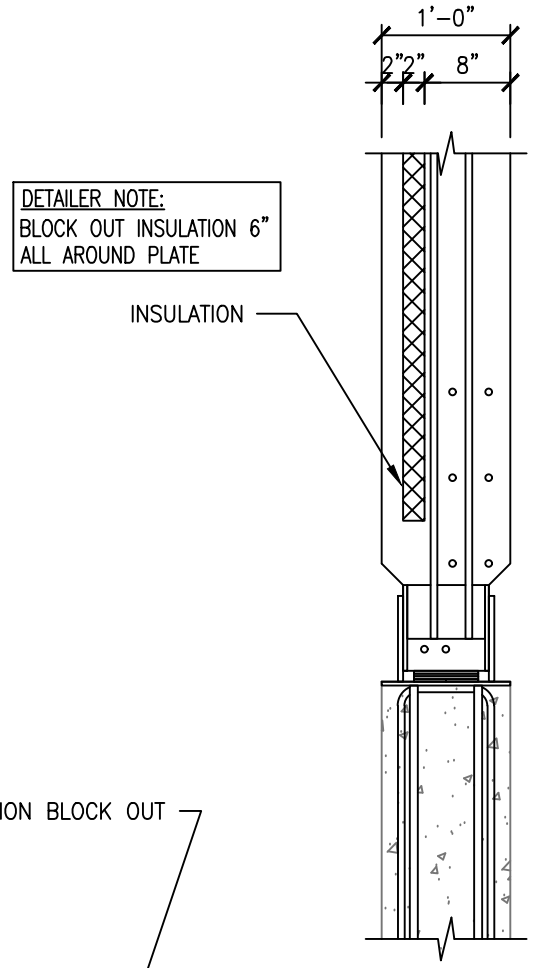
1'-0"
2"2"
8"
DETAILER NOTE:
BLOCK OUT INSULATION 6"
ALL AROUND PLATE
INSULATION